TABLE OF CONTENTS

	Pages
Introduction to Frequency Devices	2
ANALOG & DIGITAL FILTER DESIGN GUIDE	
Analog Filter Design	3
Available Filter Technology	20
Digital Filter Design	22
Signal Reconstruction	28
Choosing a Filter Solution	29
Glossary of Terms	32

We hope the information given here will be helpful. The information is based on data and our best knowledge, and we consider the information to be true and accurate. Please read all statements, recommendations or suggestions herein in conjunction with our conditions of sale, which apply, to all goods supplied by us. We assume no responsibility for the use of these statements, recommendations or suggestions, nor do we intend them as a recommendation for any use, which would infringe any patent or copyright.

1784 Chessie Lane, Ottawa, IL 61350 - Tel: 800/252-7074, 815/434-7800 - FAX: 815/434-8176

e-mail: sales@freqdev.com • Web Address: http://www.freqdev.com

THE COMPANY

Frequency Devices — founded in 1968 to provide electronic design engineers with analog signal solutions and engineering services — today designs and manufactures standard and custom signal conditioning, signal processing and signal analysis solutions utilizing analog, digital and integrated analog/digital technology. By addressing a wide array of signal processing needs, Frequency Devices continues to provide state-of-the-art solutions to the rapidly changing electronics industry. From prototype to production, we design and manufacture products to agreed-upon performance specifications, utilizing the latest technologies. These module, subassembly and instrument hardware and software solutions include analog and DSP (FIR and IIR) filters, instrumentation grade amplifiers, low distortion signal sources and data conversion products.

Focusing our talents on precision performance while minimizing size allows us to offer our customers some of the smallest, most precise, and cost-effective signal-processing products available anywhere. By integrating our superior technology into instrumentation products, we also provide compact precision bench-top, laboratory and system solutions using Compactpci, VME, VXI, and ISA architectures and RS232, IEEE-488, USB, Ethernet or Firewire interfaces that permit high speed communication, with high channel density in a minimum of space.

At the heart of our solutions lie our analog and digital technologies. Frequency Devices' ability to identify the design weaknesses of each design approach and integrate their strengths to achieve a desired performance objective through the use of layout techniques, packaging skills and intellectual property results in analog, digital and mixed signal solutions that provide superior performance. This superior performance of Frequency Devices' solutions has earned the company a place:

- On the international space station where its active filter modules are used as anti-aliasing filters in Boeing's Active Rack Isolation System (ARIS),
- At the LIGO observatory (a joint development program affiliated with California Institute of Technology, Massachusetts Institute of Technology and the National Science Foundation), providing high resolution, low noise real-time data processing digital-to-analog conversion that integrated precision analog design with state-of-the-art 24-bit digital conversion,
- And on numerous OEM, R & D, and test system applications in the health, space, defense, science, engineering, and technology segments of the precision data acquisition markets.

These applications represent only a few examples of the myriad alternatives that Frequency Devices offers to enhance the processing accuracy of analog, digital and mixed-signal systems.

1784 Chessie Lane, Ottawa, IL 61350 - Tel: 800/252-7074, 815/434-7800 - FAX: 815/434-8176

e-mail: sales@freqdev.com • Web Address: http://www.freqdev.com

DIGITIZING SIGNALS AND ALIASING – Analog to Digital Conversion (A/D)

Most physical (real world) signals are analog. Operating on these signals efficiently often requires the filtering, sampling and digitizing of the analog data using A/D converters. The converted digital data may then be manipulated mathematically. Many data-acquisition systems must also construct a representation of the original signal from the digital data stream.

Unfortunately, sampling often sacrifices accuracy for the sake of convenience. The digital version of a signal may not resemble the original in some important respects. A graphic example is the movie scene that apparently shows wagon wheels or helicopter blades turning backwards. This erroneous image, known as an "alias", occurs because a "motion picture" camera actually samples continuous action into a series of stills, and the frame rate (commonly 24 or 30 frames per second) is not fast enough or is nearly an exact multiple of the object's rotation speed.

According to Nyquist's Theorem, accurately representing an analog signal with samples requires that the original signal's highest frequency component be less than the Nyquist frequency, which is at least half the sampling frequency. To correct the image in the movie example, the frame rate would have to exceed twice the rotation speed of the wheel (or its spokes) or of the helicopter blades. No practical data-acquisition system can sample fast enough to catch all of a real signal's components. Frequencies above Nyquist appear as false low-frequency aliases. As an example, **Figure 1** shows the result of sampling a 900 Hz signal at 1 kHz.

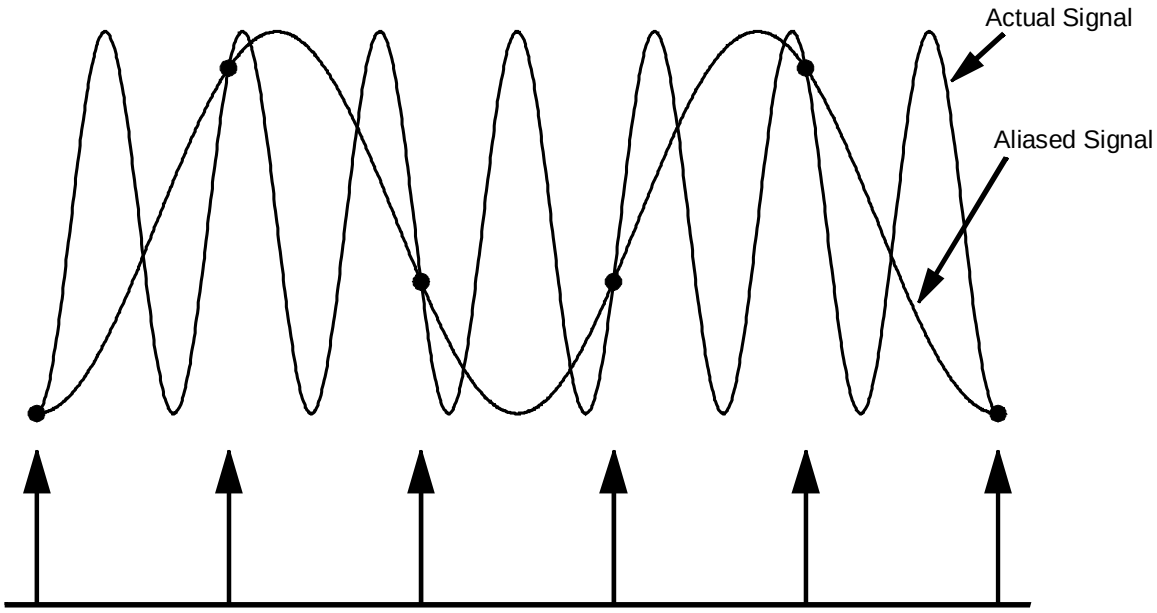

Figure 1

The process seems to indicate that the original signal was a 100 Hz sine wave, the difference between the actual input wave and sampling frequencies. Note that as the maximum signal frequency approaches the Nyquist frequency, the total number of samples needed to reconstruct the signal accurately approaches infinity.

Aliasing is a fundamental mathematical result of the sampling process. It occurs independent of any physical sampling-system capabilities. Downstream processing cannot reverse its effect. Only filtering out the alias high frequency components before sampling begins can prevent it.

1784 Chessie Lane, Ottawa, IL 61350 - Tel: 800/252-7074, 815/434-7800 - FAX: 815/434-8176
e-mail: sales@freqdev.com • Web Address: http://www.freqdev.com

When a signal undergoes A/D conversion, the amplitude of any frequency component above Nyquist should be no higher than the converter's least significant bit (LSB). Some sources insist on reducing the amplitude to below half of the LSB. For any full-scale undesirable signal component, then, attenuation should be at least 6 dB x n, where "n" is the number of bits in the A/D. For half of the LSB, attenuation would be 6 dB x (n + 1). A 12-bit A/D, then, demands attenuation of 72 dB or 78 dB.

In practice, noise-signal amplitudes rarely match the amplitudes of signal components of interest, so this attenuation calculation represents worst case.

IDEAL FILTER SHAPES (THEORETICAL)

Every electronic design project produces signals that require filtering, processing, or amplification, from simple gain to the most complex DSP. The following presentation attempts to "de-mystify" some of these signal-processing requirements. The concepts of ideal filters, commonly used filter transfer function characteristics and implementation techniques will assist the reader in determining their electronic filter and signal conditioning needs.

Real-world signals contain both wanted and unwanted information. Therefore, some kind of filtering technique must separate the two before processing and analysis can begin.

An ideal filter transmits frequencies in its pass-band, unattenuated and without phase shift, while not allowing any signal components in the stop-band to get through. All filters offer a pass-band, a stop-band and a cutoff frequency or **corner frequency** (f_c) that defines the frequency boundary between the pass-band and the stop-band.

Figure 2 shows the four basic filter types: low-pass, high-pass, band-pass and band-reject (notch) filters. The differences among these filter types depend on the relationship between pass- and stop-bands.

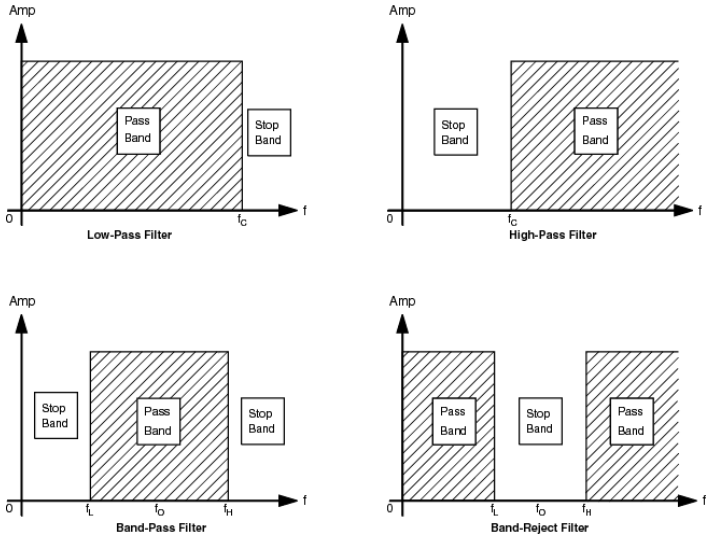

Figure 2

Low-pass filters are by far the most common filter type, earning wide popularity in removing alias signals and for other aspects of data acquisition and signal conversion. For a low-pass filter, the pass-band extends from DC (0 Hz) to f_c and the stop-band lies above f_c.

In a **high-pass** filter, the pass-band lies above f_c, while the stop-band resides below that point.

1784 Chessie Lane, Ottawa, IL 61350 - Tel: 800/252-7074, 815/434-7800 - FAX: 815/434-8176
e-mail: sales@freqdev.com • Web Address: http://www.freqdev.com

Combining high-pass and low-pass technologies permits constructing band-pass and band-reject filters. **Band-pass** filters transmit only those signal components within a band around a center frequency f_o. An ideal band-pass filter would feature brick-wall transitions at f_L and f_H, rejecting all signal frequencies outside that range. Band-pass filter applications include situations that require extracting a specific tone, such as a test tone, from adjacent tones or broadband noise.

Band-reject (sometimes called band-stop or notch) filters transmit all signals except those between f_H and f_L. These filters can remove a specific tone — such as a 50 or 60 Hz line frequency pickup — from other signals. A common application is medical instrumentation, where high-impedance sensors pick up line frequencies.

NON-IDEAL FILTERS (REAL WORLD)

Real-world signals contain both wanted and unwanted information. Therefore, some kind of filtering technique must separate the two before processing and analysis can begin. Real filters are far from ideal. They subject input signals to mathematical transfer functions with names like Butterworth, Bessel, constant delay and elliptic that only approximate ideal behavior. Instead of the sharply defined transition represented by ideal filters, real filters contain a transition region between the pass-band and the stop-band as shown in **Figure 3**.

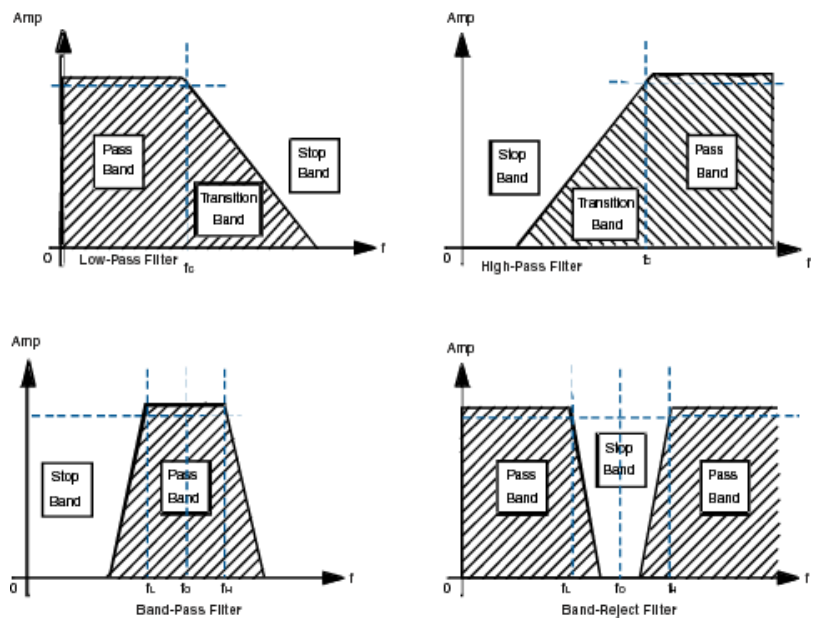

Figure 3

In addition, the pass-band is not flat like the ideal filter, may contain attenuation ripple, and the attenuation in the stop-band may not be infinite. In order to simplify the analysis of various real world filter types, filter response curves are normalized. When selecting a filter, this normalized data allows the designer to compare the theoretical amplitude, phase and delay characteristics of each filter type.

1784 Chessie Lane, Ottawa, IL 61350 - Tel: 800/252-7074, 815/434-7800 - FAX: 815/434-8176
e-mail: sales@freqdev.com • Web Address: http://www.freqdev.com

Normalization

See **Figure 4** below for the theoretical performance characteristics and normalized response curve of an 8-pole, 6-zero constant delay filter. The frequency axis on the response plot is scaled so that the corner or ripple frequency is always one Hertz instead of the actual intended corner or ripple frequency. This allows one normalized curve to represent any filter that would have the same response shape. To convert a normalized amplitude response curve to a curve representing a filter whose corner frequency is not at one Hertz, multiplying any number on the frequency axis by the intended corner or ripple frequency scales the frequency axis.

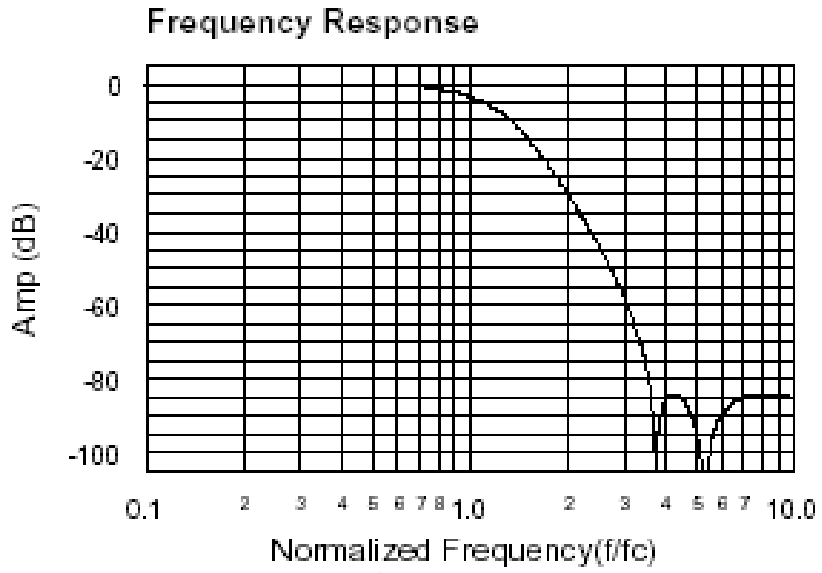

Figure 4

Amplitude Response

Amplitude Response is defined as the ratio of the output amplitude to the input amplitude versus frequency and is usually plotted on a log/log scale as shown in **Figure 5**. Note how the steepness of the transition band slope (roll-off) increases as the number of poles increase.

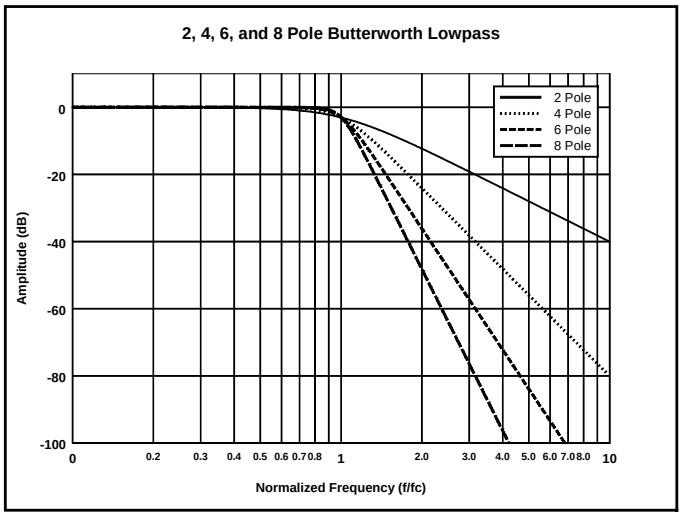

Figure 5

1784 Chessie Lane, Ottawa, IL 61350 - Tel: 800/252-7074, 815/434-7800 - FAX: 815/434-8176
e-mail: sales@freqdev.com • Web Address: http://www.freqdev.com

Phase Response

All non-ideal filters introduce a time delay between the filter input and output terminals. This delay can be represented as a phase shift if a sine wave is passed through the filter. The extent of phase shift depends on the filter's transfer function. For most filter shapes, the amount of phase shift changes with the input signal frequency. The normal way of representing this change in phase is through the concept of **Group Delay**, the derivative of the phase shift through the filter with respect to frequency.

Group Delay (D) equation: $D = \frac{d\phi}{df}$

Group Delay

Group Delay is the phase slope on a linear phase vs. frequency plot. **Figure 6** compares the group delay of some typical phase response curves.

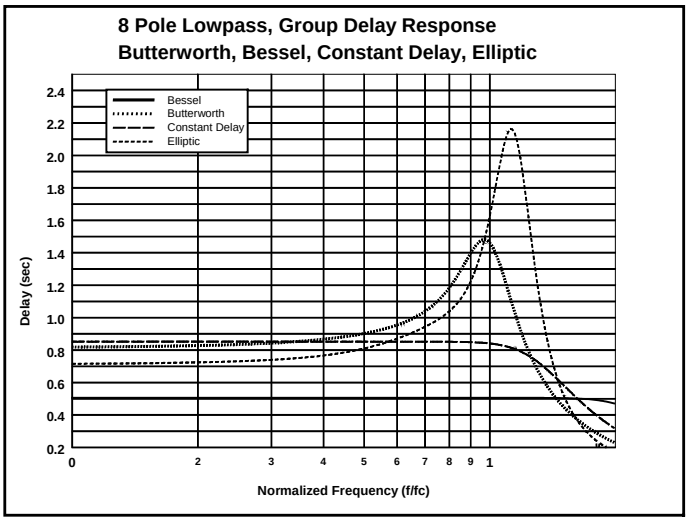

Figure 6

Thus a point on a normalized group delay curve that has a group delay of one (1.0) second would yield 1 millisecond **Actual Delay** for a filter with a 1KHz corner frequency.

$$\textbf{Actual Delay} = \frac{\text{Normalized Group Delay}}{\text{Actual Corner Frequency (fc) in Hz}}$$

$$\textbf{Actual Delay} = \frac{1.0\ \text{sec}}{1000\ \text{Hz}} = \textbf{0.001 sec/Hz}$$

Analog Filter Specifications

Low-Pass and High-Pass

In order to define the limits of the filter pass-band in real circuits, most filter specifications define the **corner frequency** (f_c), as the frequency where attenuation reaches -3 dB or for elliptic filters, the **ripple frequency** (f_r), the point where the response curve last passes through the specified pass-band ripple. Filter specifications may also include a **shape factor** (sf) requirement, which describes how fast signals roll-off during transition. The sf represents the ratio between the cutoff/ripple frequency and where the filter achieves a desired attenuation level, say (-80 dB).

1784 Chessie Lane, Ottawa, IL 61350 - Tel: 800/252-7074, 815/434-7800 - FAX: 815/434-8176
e-mail: sales@freqdev.com • Web Address: http://www.freqdev.com

Figure 7 is an elliptic filter that attenuates to -80 dB at 1.56 f_r, hence a shape factor of 1.56 to -80 dB. A high-pass filter with a 1.56 shape factor would achieve that same -80 dB of attenuation at f_r/1.56 or 0.64 f_r.

Filter Attenuation	(Theoretical)
0.05 dB	1.00 f_r
3.01 dB	1.05 f_r
60.0 dB	1.45 f_r
80.0 dB	1.56 f_r

Also note that the elliptic transfer function attenuation floor is not infinite, but has notches and humps.

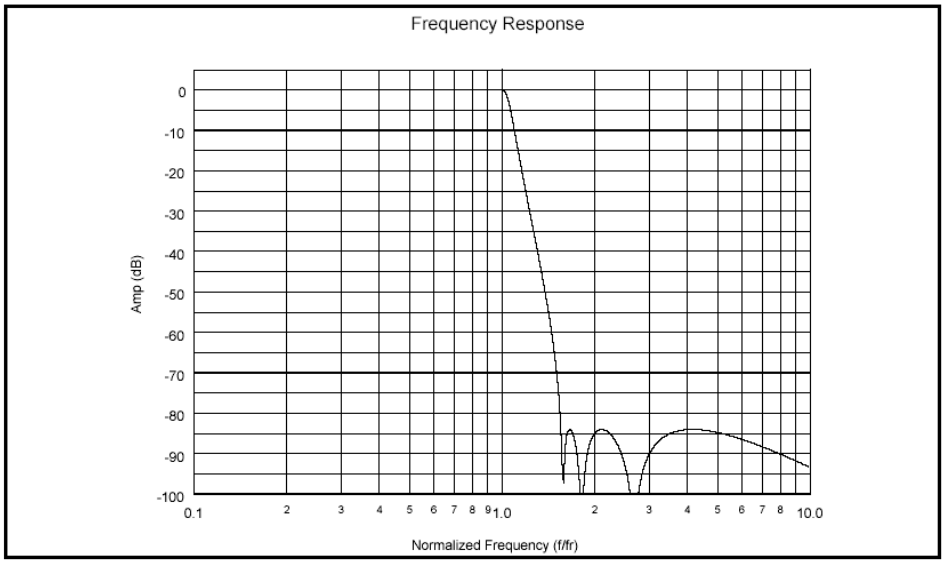

Figure 7

From the attenuation table above, this low-pass elliptic filter has a –3 dB frequency of 1.05 at f_r, therefore the **shape factor** is calculated as follows:

$$\mathbf{sf}\left(\frac{-80\text{dB}}{-3\text{dB}}\right) = \frac{1.56}{1.05} = \mathbf{1.486}$$

Band-Pass and Band Reject Filters

Specific items of interest for **Band-Pass** filters are the **Center Frequency (geometric mean) f_o**, the **Filter Bandwidth**, the **Quality Factor (Q)** and the **shape factor**.

Frequency f_o represents the geometric mean of f_H and f_L. That is:

$$\mathbf{f_o} = \sqrt{f_H x f_L}$$

Bandwidth is defined as the difference between pass-band extremes:

$$\textbf{Bandwidth} = \mathbf{f_H - f_L}$$

1784 Chessie Lane, Ottawa, IL 61350 - Tel: 800/252-7074, 815/434-7800 - FAX: 815/434-8176
e-mail: sales@freqdev.com • Web Address: http://www.freqdev.com

The **Quality Factor (Q)** of a band-pass filter represents the ratio of the center frequency f_o to the –3 dB bandwidth

$$Q = \frac{f_o}{(f_H - f_L)}$$

Following is an example of band-pass filter calculations:

Filter Attenuation	f_H/f_o	f_L/f_o
-3dB	1.105	0.905
-80dB	2.414	0.414

$$f_H(\text{-3dB}) - f_L(\text{-3dB}) = 1.105\ f_o - 0.905\ f_o = 0.20\ f_o$$
$$f_H(\text{-80dB}) - f_L(\text{-80dB}) = 2.41\ f_o - 0.414\ f_o = 2.0\ f_o$$

$$\textbf{Therefore: Q (-3dB)} = \frac{f_o}{f_H(-3\text{dB}) - f_L(-3\text{dB})} = \frac{f_o}{0.2f_o} = \mathbf{5}$$

$$\mathbf{sf}\left(\frac{-80\text{dB}}{-3\text{dB}}\right) = \frac{f_H(-80\text{dB}) - f_L(-80\text{dB})}{f_H(-3\text{dB}) - f_L(-3\text{dB})} = \frac{2.0f_o}{0.2f_o} = \mathbf{10{:}1}$$

Figure 8 is a plot of a four pole-pair band-pass with a Butterworth transfer function and a Q of 5. For band-pass filters, the shape factor shows the ratio of the bandwidth at some attenuation level (say -80 dB) to the specified pass-band bandwidth (the bandwidth at -3 dB). Its shape factor at –80 dB is 10:1.

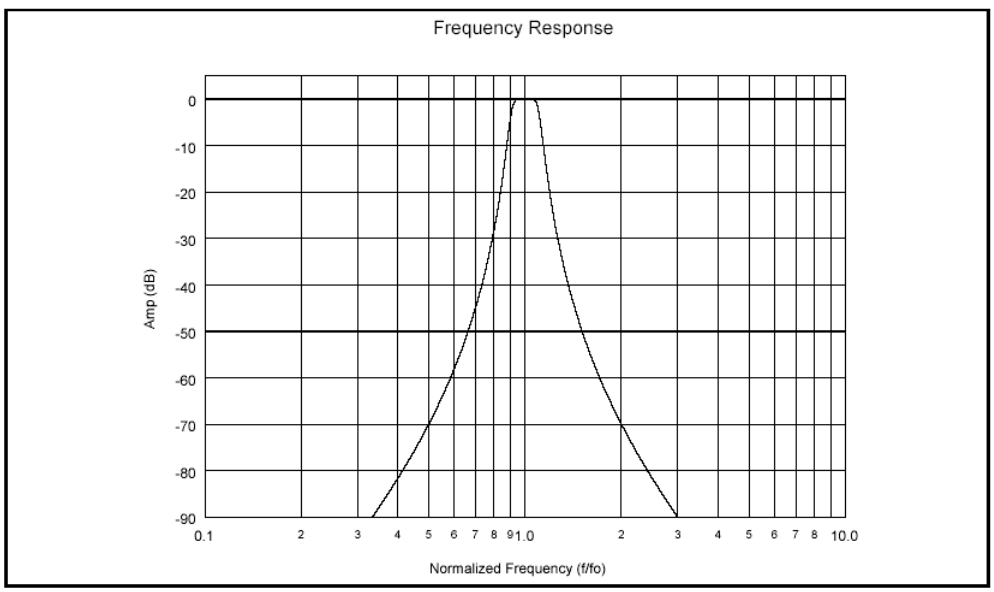

Figure 8

A **Band-Reject** filter's shape factor is the reciprocal of this number – that is, the ratio of the pass-band bandwidth to the corresponding bandwidth at the noted attenuation level.

1784 Chessie Lane, Ottawa, IL 61350 - Tel: 800/252-7074, 815/434-7800 - FAX: 815/434-8176
e-mail: sales@freqdev.com • Web Address: http://www.freqdev.com

Filter Equations

Filter transfer functions relate filter output to input through polynomials in the Laplace-transform complex variable "S" as shown in **Equation 1**. Using the "S" domain may seem confusing, but allows both the amplitude and time response of a filter to be expressed in a simple format. A two pole, two zero, low-pass filter can be expressed as:

$$H(s) = \frac{Ho(\omega_o / \omega_n)^2 (s^2 + \omega_n{}^2)}{s^2 + \frac{\omega_o s}{Q} + \omega_o{}^2}$$

Equation 1

where: H_o = dc gain

Q = peaking factor at the corner frequency

$\omega_o = 2\pi f_o$ = filter corner frequency

ω_n = filter notch frequency

Filters may include both **Poles** and **Zeros**. A **Pole** is any frequency that makes the denominator of the mathematical transfer function go to zero. A **Zero** is a frequency that makes the transfer-function numerator go to zero. Second-order transfer functions may contain two poles and up to two zeros. To achieve steeper roll-off, higher-order real filters usually include cascades of second-order and first-order filter stages.

To produce the phase and frequency response, "S" in the above equation is replaced by $j\omega$. Consider the second-order function that produces the amplitude versus frequency curve in **Figure 9**.

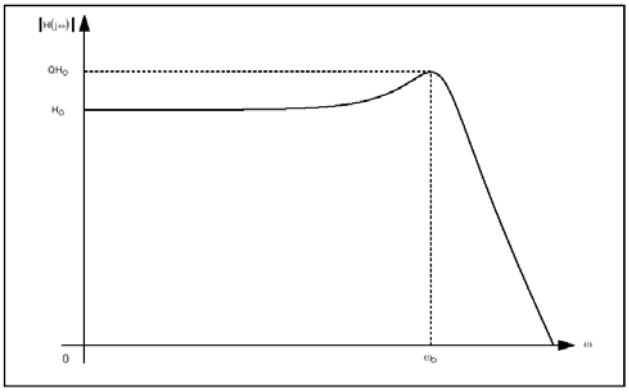

Figure 9

Varying H_o, ω_o, and Q (the gain at ω_o) changes the curve's shape. As frequency gets very large compared to ω_o, roll-off (the slope of the curve) approaches -6N dB per octave or -20N dB per decade, where N is the order of the filter (in this example N=2).

1784 Chessie Lane, Ottawa, IL 61350 - Tel: 800/252-7074, 815/434-7800 - FAX: 815/434-8176
e-mail: sales@freqdev.com • Web Address: http://www.freqdev.com

Complex poles consist of a negative real portion and an imaginary portion that can be either positive or negative. An “S-plane” plot, with a real axis and an imaginary axis, provides a convenient way to observe filter differences. **Figure 10** shows typical transfer functions for four-pole filters as both S-plane and frequency-domain graphs.

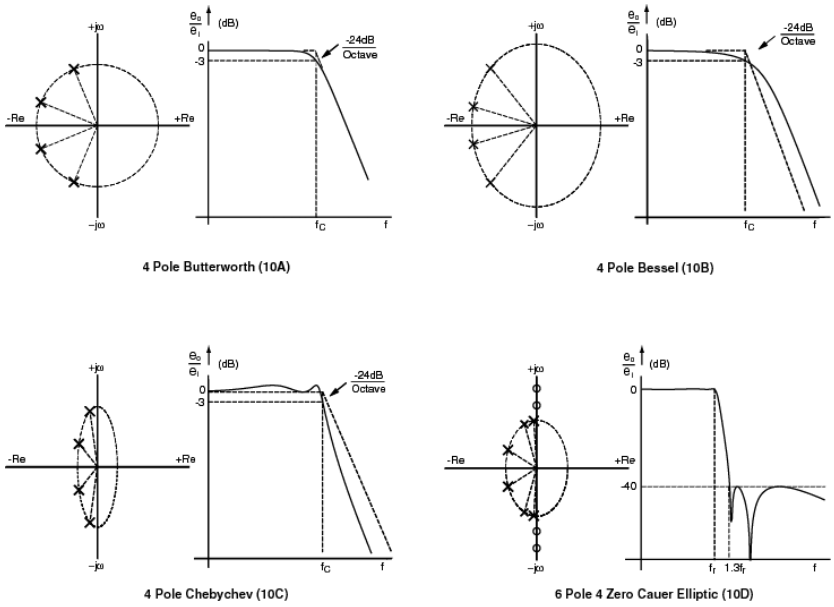

Figure 10

Linear-active filters can be made to closely match theoretical transfer functions. Cascading first and second-order filter sections easily produces three, four, five, six, seven, and eight-pole roll-off characteristics. Performance is as good as the operational amplifiers that they contain. With appropriate component selection, these filters contribute little broad-band-noise and can achieve distortion levels lower than -100 dB. Semiconductor switches permit corner-frequency programming without significant noise, distortion, or other undesirable effects. These filters are generally smaller than passive types for frequencies less than 100 kHz. Filter-section corner frequencies—and therefore the accuracy and shape of phase and amplitude curves—depend on amplifier characteristics, passive-component accuracy and stability.

ANALOG CIRCUIT DESIGN

Though there are several ways of constructing active filters, most applications use one of three topologies: The **Sallen-Key** topology injects signal into the non-inverting input of the opamp, which is usually set for unity gain operation. This allows very accurate unity gain in the filter passband. Distortion can be a problem for the Sallen-Key design, as most opamps do not allow a large common mode signal swing without adding distortion to the signal. Only one opamp is needed to build a two-pole filter section.

The **multiple feedback** topology also uses one opamp for a two pole section, injecting signal into the inverting input of the opamp, usually with the non-inverting input grounded. This limits common mode input voltage swing and provides better distortion for larger signal swings. Gain set depends on resistor ratios, so pass-band gain is dependent on the accuracy of the resistors chosen. You can build high-pass filters in the multiple feedback form though the input impedance decreases to a very low value at higher frequencies. It is not possible to build multiple feedback filters with zeros. Multiple feedback topologies are not as versatile as other topologies.

1784 Chessie Lane, Ottawa, IL 61350 - Tel: 800/252-7074, 815/434-7800 - FAX: 815/434-8176
e-mail: sales@freqdev.com • Web Address: http://www.freqdev.com

For precision performance the **state variable** topology is the hardest to design but provides the most versatility. State variable designs require a minimum of three opamps and often are realized using four opamps to increase the versatility even further. Unlike the Sallen-Key and multiple feedback topologies, the state variable filter Q, f_o and pass-band gain can all be independently set. This independence allows for higher precision filters because of the reduced component tolerance buildup. The state variable filter is the basis for most programmable filters.

An active filter's amplifiers contribute DC offset, although careful filter design can limit it to millivolt, and in many cases microvolt, levels. This error is usually stable with time and changes little with temperature. The amplifiers also add harmonic distortion to filter output. However, since active filters can achieve distortion levels less than -100 dB at frequencies up to 100 kHz and -110 dB at up to 20 kHz, they can easily pre-filter 16-bit (-96 dB) and 18-bit (-108 dB) A/D converters.

FILTER SELECTION

Transfer functions can be classified into one of two basic categories, **Amplitude filters** and **Phase filters**. Amplitude filters are designed for the best amplitude response for a given situation, for example zero ripple in the amplitude response pass-band. Phase filters are designed for desired phase response, such as linear phase with frequency throughout the filter amplitude pass-band.

Amplitude Filters

For many applications the design goal is to approximate ideal "brick wall" frequency response. Probably the most common amplitude filter transfer function is the **Butterworth**, which consists of an array of poles uniformly distributed on a left-half-plane unit circle, as in **Figure 10A**. This arrangement yields the maximally flat amplitude response in the pass-band (the first **2n - 1** derivatives of the frequency response are equal to zero, where n is the number of poles). Therefore, amplitude response rolls-off monotonically (uniform slope) as frequency increases in the stop-band.

The attenuation ratio "A(ω)", of a Butterworth low-pass transfer function is given by:

$$\mathbf{A(\omega)} = \sqrt{1+\omega^{2N}}$$

where N = degree of the filter (number of poles).

Butterworth filters produce no pass-band ripple and provide theoretically infinite attenuation as frequency increases when compared to f_c. The primary limitation is, Butterworth filters produce slower roll-off than some of the alternative transfer functions.

The attenuation ratio of a **Chebychev** transfer function (**Figure 10C**) is given by:

$$\mathbf{A(\omega)} = \sqrt{1+\varepsilon^2 C_N^2(\omega)}$$

which generates a series of polynomials, where ε is pass-band ripple and CNω represents the nth order polynomial in the series. **Table 1** shows the first five Chebychev polynomials.

1784 Chessie Lane, Ottawa, IL 61350 - Tel: 800/252-7074, 815/434-7800 - FAX: 815/434-8176
e-mail: sales@freqdev.com • Web Address: http://www.freqdev.com

Chebychev Polynomials $C_N\omega$	
N	**$C_N\omega$**
1	ω
2	$2\omega^2-1$
3	$4\omega^3-3\omega$
4	$8\omega^4-8\omega+1$
5	$16\omega^5-20\omega^3+5\omega$

Table 1

The Chebychev function provides faster roll-off in the transition band than a Butterworth filter would, but at the expense of some variation in the pass-band called ripple. **Ripple** denotes that the amplitude in the pass-band varies between 1 and $(1 + \varepsilon^2)$, where ε is always less than 1. Pole frequencies are more spread out and the Q's of the sections are higher than the comparable section Q's of a Butterworth. Determining pole locations involves applying hyperbolic trigonometric functions to each pole of a Butterworth filter of the same order. Like the Butterworth, Chebychev stop-band roll-off is monotonic. It is important to note that many designers avoid Chebychev transfer functions in favor of Cauer elliptic alternatives because section Q's are higher for Chebychevs than with elliptic functions which provide faster roll-off in the transition-band.

Cauer elliptic transfer-function attenuation is given by:

$$|H(s)| = \sqrt{\frac{1}{1+\varepsilon^2 Z_N^2(\omega)}}$$

where $S = j\omega$, Z_N is the nth order elliptic polynomial, and ε determines pass-band ripple attenuation at the cutoff frequency, $\omega = 1$. Although an elliptic filter achieves faster roll-off than either Butterworth or Chebychev varieties, it introduces ripple in both the pass- and stop-bands. Also, elliptic filter roll-off is not monotonic, eventually reaching an attenuation limit, called the stop-band floor.

For elliptic filters, shape factor depends not on the -3 dB corner frequency (f_c), but on ripple frequency (f_r), the highest pass-band frequency on a low-pass filter or the lowest pass-band frequency on a high-pass filter where pass-band ripple occurs, as shown in **Figure 11.**

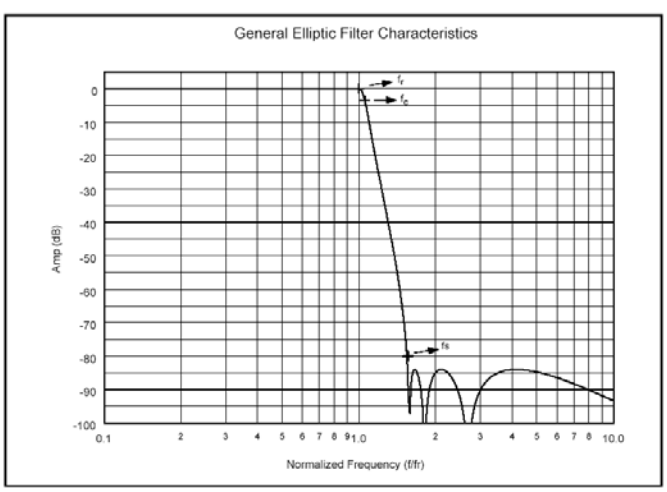

Figure 11

1784 Chessie Lane, Ottawa, IL 61350 - Tel: 800/252-7074, 815/434-7800 - FAX: 815/434-8176
e-mail: sales@freqdev.com • Web Address: http://www.freqdev.com

At the stop-band edge, a small frequency change produces a large change in attenuation. Another critical element in the shape of an elliptic filter is frequency f_s, which denotes the first frequency at which the attenuation reaches the stop-band floor.

The pole configuration for this transfer function consists of a set of poles around an ellipse with pairs of zeros on the $j\omega$ axis, see **Figure 10D**. Pole frequencies are spread out over the pass-band. Section Q's are less than those in a comparable-order-and-ripple Chebychev. Desired pass-band ripple, stop-band floor and shape factor determines actual pole and zero locations in a particular filter. **Figure 12** compares the amplitude response of 8-pole Butterworth, 0.1 dB ripple Chebychev, and 0.1 dB ripple, -84 dB stop-band floor Cauer-elliptic transfer functions. The curves are normalized to the –3 dB cutoff frequency.

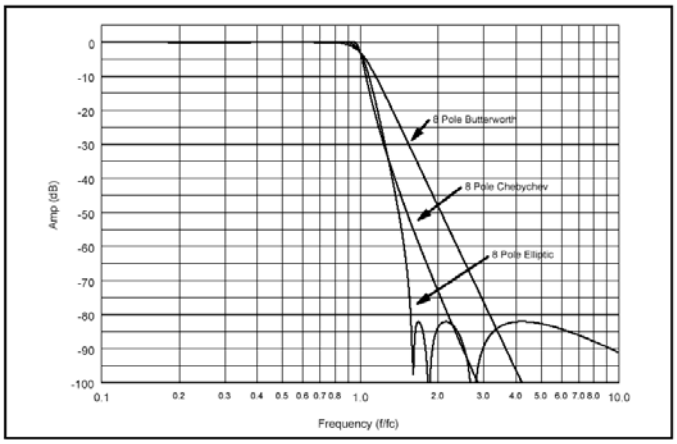

Figure 12

Generally, filters that produce faster roll-off in the transition-band exhibit poorer phase response and group delay characteristics (**See Figure 6)**.

Phase Filters

For some filter applications it is desirable to preserve a transient waveform while removing higher frequency noise components from the signal. If each of the frequency components of the input waveform (from the Fourier series or the Fourier transform) is phase shifted an amount linearly proportional to frequency, then they remain in the correct time relationship and sum together to create, at the output, the original waveform that was present at the input of the filter, with the higher frequencies components having been removed by the filter. When a filter has phase delay that varies linearly with frequency it is called a **Linear Phase** filter. A linear phase filter has a constant group delay, at least through the pass-band. Amplitude filters provide relatively constant group delay only from 0 Hz to about the mid pass-band frequency range peak near f_c.

As with amplitude filters, mathematicians have provided polynomial approximations of an ideal linear phase transfer function. The most common linear phase filter is based on **Bessel** (sometimes called Thompson) functions. Bessel filters provide very linear phase response and little delay distortion (constant group delay) in the pass-band. They show no overshoot in response to step input and roll-off monotonically in the stop-band. They also exhibit much slower attenuation in the transition-band than amplitude filters. **Figure 13** presents amplitude and delay response curves for an 8-pole Bessel. Other types of phase filters include, constant-delay (a modified Bessel), equiripple phase, equiripple delay, and Gaussian transfer functions. They either have more pass-band amplitude roll-off for only a small improvement in phase linearity or only slightly less roll-off in the pass-band at the expense of degrading the phase linearity.

1784 Chessie Lane, Ottawa, IL 61350 - Tel: 800/252-7074, 815/434-7800 - FAX: 815/434-8176
e-mail: sales@freqdev.com • Web Address: http://www.freqdev.com

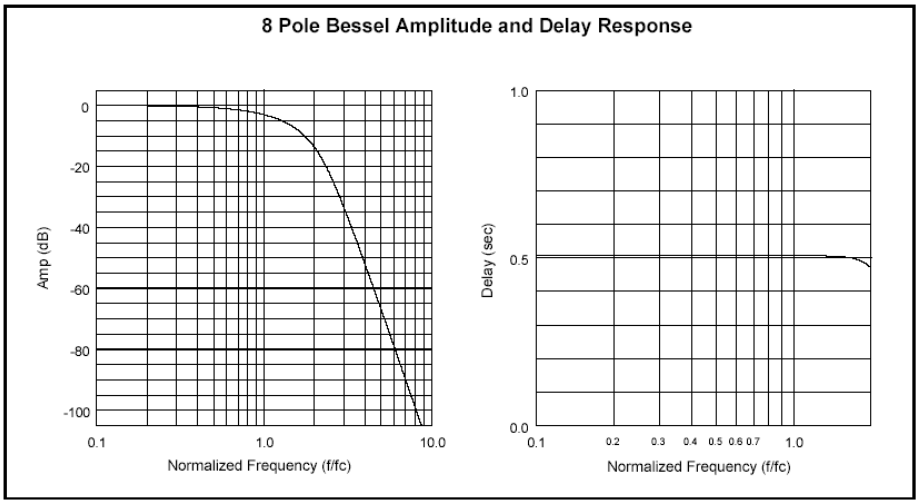

Figure 13

Compensated Filters

Some applications require filters offering the sharp roll-off characteristics of amplitude-type filters and the linearity of phase-type transfer functions. Two techniques, amplitude equalization and delay equalization, are available to achieve these ends. Both add complexity to filter design, and have theoretical and practical limits.

Amplitude equalization modifies the amplitude response of phase filters to produce a filter that is sometimes called a **constant delay** filter. Stop-band zeros on the jω axis introduce attenuation notches in the stop-band, but contribute no phase or delay to the pass-band response. **Figure 14** shows mirror-image right-half, left-half plane pass-band-zero pairs that modify amplitude response without additional phase or delay.

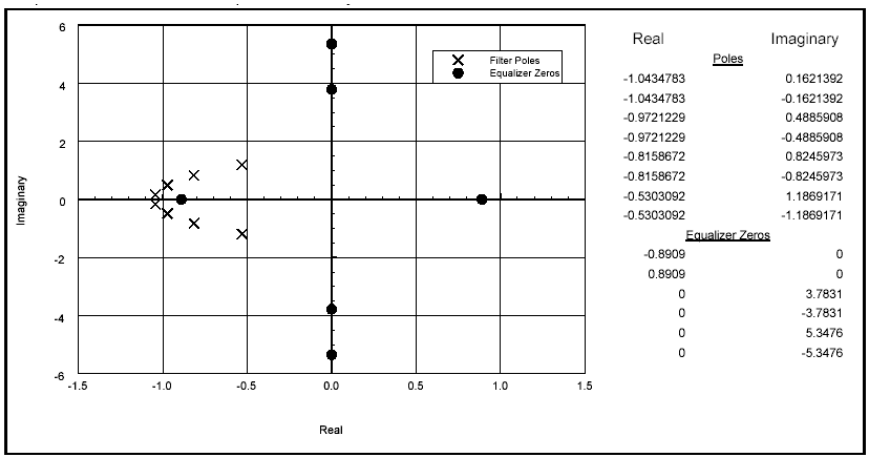

Figure 14

Improving the transition-band roll-off rate, however, does not come free. Adding zeros also introduces a small amount of step-input overshoot, and roll-off is no longer monotonic; that is, compensation introduces a stop-band floor. The jω-axis zeros produce a "soft" or rounded roll-off near the cutoff frequency. These zeros become the dominant contributors to attenuation-curve shape, preventing further corner-frequency shape improvement.

1784 Chessie Lane, Ottawa, IL 61350 - Tel: 800/252-7074, 815/434-7800 - FAX: 815/434-8176
e-mail: sales@freqdev.com • Web Address: http://www.freqdev.com

This technique can achieve a factor-of-two improvement in Bessel roll-off to a -80 dB floor, comparable to Butterworth-filter performance. For comparison, **Figure 15** shows the amplitude response of an 8-pole Bessel, an 8-pole, 6-zero constant delay, and a 8-pole Butterworth response.

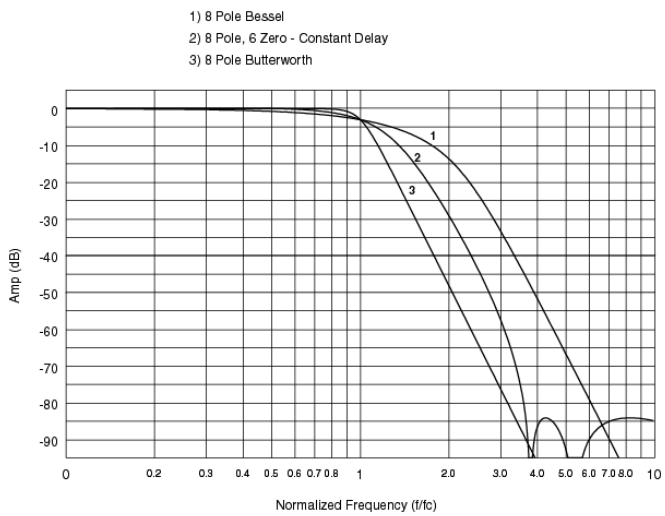

Figure 15

Delay equalization employs additional all-pass (no attenuation) filter sections in cascade with standard filter sections to modify the phase linearity of amplitude filters. All-pass filters have left-half-plane poles and mirror image right-half-plane zeros. The pole and zero locations determine phase shift, though the added phase shift does not change the filters amplitude response. Adding phase shift at appropriate places in the pass-band allows, "straightening out" the phase curve of an amplitude filter. Each pole-zero pair of an all-pass filter increases phase shift from approximately 90º at f_c to as much as 180º at 10 times f_c. Therefore, adding equalizer sections increases total phase shift for the filter/equalizer network.

From a practical point-of-view, this technique allows filter and system designers an order-of-magnitude phase-linearity improvement over conventional amplitude transfer functions. **Figure 16** illustrates the group delay of a 6-pole, 4-zero elliptic filter with and without a two-pole delay equalizer. The equalized plot is flatter over a larger portion of the pass-band at the expense of an increase in the amount of delay. The equalization process in this case increases total phase shift by as much as 360° at the cutoff frequency and by 720° at higher frequencies.

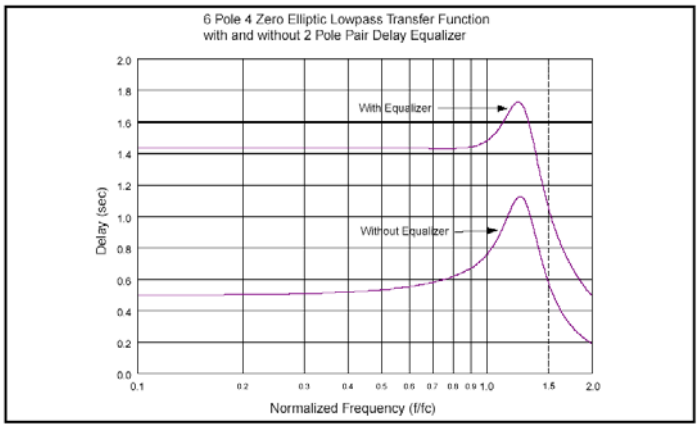

Figure 16

1784 Chessie Lane, Ottawa, IL 61350 - Tel: 800/252-7074, 815/434-7800 - FAX: 815/434-8176
e-mail: sales@freqdev.com • Web Address: http://www.freqdev.com

The number and location of poles and zeros in a delay equalizer depend on the pole configuration of the accompanying filter and the desired linearity improvement. Therefore, there are no "standard" solutions. Frequency Devices creates delay-equalization filters based on each situation and on each customer's specific requirements.

OUTPUT SIGNAL ERRORS

Besides inaccuracies of theoretical approximation, the most significant side effects of signal filtering are the following:

Settling time is not strictly an output signal error because it is mathematically related to the filter transfer function, but is usually deemed to be an undesirable filter side effect. All filters serve to delay the input signal by a certain minimum amount as well as increasing rise and fall time of any fast changing input signal. A general rule for settling time is that the more the filter approaches a "brick-wall" approximation, the longer it will take to settle. Therefore, an eight-pole filter will take longer to settle than a four-pole filter.

Step Response for amplitude type filters may exhibit substantial overshoot (ringing) when presented with a sudden change in voltage amplitude at the filter input. See **Figure 17** for typical 8 pole transfer function step response curves.

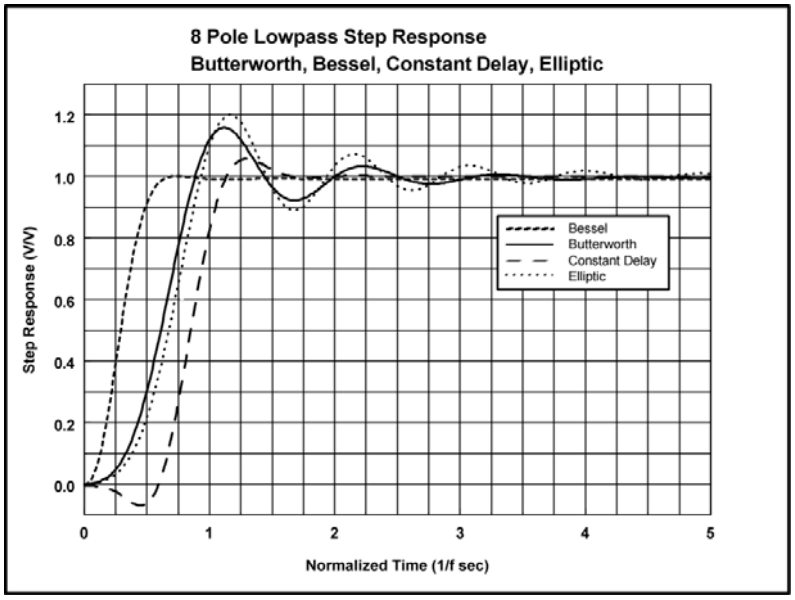

Figure 17

DC-offset adds a voltage directly to an input signal to obtain the output value. Sophisticated systems may permit calibrating or compensating for this effect. When evaluating filters and A/D converters, designers must also consider DC-offset stability with time and temperature to ensure that compensation circuitry and procedures remain valid regardless of environmental conditions. For programmable filters, DC offset may vary with corner-frequency settings.

1784 Chessie Lane, Ottawa, IL 61350 - Tel: 800/252-7074, 815/434-7800 - FAX: 815/434-8176
e-mail: sales@freqdev.com • Web Address: http://www.freqdev.com

Noise (noise created by both passive and semiconductor devices) is present at the output of any filter. In most cases, later filter stages remove stop-band noise from earlier stages, but they leave noise in the pass-band unaffected. High-Q filter stages amplify noise near their corner frequencies. In an active filter, for example, the noise spectrum in the stop-band is usually flat and low level, resulting largely from the output amplifier. At the low-frequency end of the pass-band, the noise spectrum is also flat, but with a magnitude two to four times the level of the stop-band noise. Near the corner frequency, noise levels peak at magnitudes that depend on the filter's transfer function. Elliptic filters, which feature high-Q last stages, produce noise peaks near the corner frequency of three to five times the level of low-frequency pass-band noise.

The importance of noise will depend on the system bandwidth and the level of signals passing through the filter. In digitizing systems, aliasing folds a frequency spectrum around each harmonic of the sampling frequency, and because these effects are additive, achieving the best data accuracy requires reducing broad-band-noise as much as possible.

Distortion, harmonics of the input signal's frequency components result from non-linearity in the filter circuit. These harmonics become inputs to the A/D converter, which digitizes them with the rest of the signal. As with broad-band-noise, each low-pass filter stage removes stop-band distortion components that the previous stage generates. Distortion levels vary with input-signal frequency, amplitude, transfer function, and corner frequency.

Total Harmonic Distortion (THD) is a specification often used as a single number representation of the distortion present in the output of an active circuit. It is the RMS sum of the individual harmonic distortions (i.e. 2nd, 3rd, --- etc.) that are created by the non-linearities of the active and passive components in the circuit when it is driven by a pure sinusoidal input at a given amplitude and frequency.

Harmonic distortion measurement requires a very low distortion sinusoidal input to the circuit, the removal of the fundamental frequency component from the output and the measurement of the amplitude of the remaining harmonics, which are typically 60 to 140 dB below that of the fundamental.

Spectrum analyzers and FFT instruments can measure individual harmonic components and can be used to calculate the THD. For active filters, the THD is usually specified in dBc (dB relative to the amplitude of the fundamental frequency component) and at a specific frequency and amplitude (ex. 10Vp-p @ 1.0kHz). An RMS voltmeter can be used to measure the THD if, the fundamental frequency component can be removed by a notch filter to a level that is at least an order of magnitude below the largest harmonic component. However, that measurement will also include any noise that is within the bandwidth of the meter and is commonly referred to as the THD + NOISE or THD + N.

At lower frequencies, amplifiers have sufficient loop gain to reduce distortion to acceptable levels. For input frequencies near f_c, the filter removes second and higher order harmonics. Above the corner frequency, filter attenuation reduces the primary signal, which also reduces the distortion. However, if` the signal frequencies are well below the corner frequency and the signal has distortion, then that distortion will also reside in the filter's pass-band. Distortion components will affect the accuracy of the analog-to-digital signal conversion.

1784 Chessie Lane, Ottawa, IL 61350 - Tel: 800/252-7074, 815/434-7800 - FAX: 815/434-8176
e-mail: sales@freqdev.com • Web Address: http://www.freqdev.com

SELECTING THE RIGHT ANALOG FILTER

Choosing the correct filter shape for a particular application requires defining properties of the incoming signal that the filter must remove, as well as the properties that it must retain. In most situations, there is some overlap between these two areas, demanding a degree of compromise.

Time Domain Waveform Preservation

Filters for such applications feature linear phase response in the pass-band, and must not introduce ringing or overshoot. To preserve the signal waveform while removing undesired components, the filter must also pass many harmonics of the incoming signal's base frequency. "Noise" components that the filter removes must be at substantially higher frequencies than these necessary harmonics. Phase-derived filters, such as Bessel or constant-delay (equiripple-phase) and their amplitude-compensated derivatives, work best in these cases.

High Selectivity in the Frequency Domain

Situations where removal of undesired components is the overriding concern and some distortion in the time domain of the signal's shape is of less importance generally require sharper roll-off filters with Butterworth or elliptic transfer functions. Spectrum analysis, for example, involves only the amplitude of each frequency component of the input signal. Most voice and data transmission also requires integrity only of amplitudes, as do many forms of modal analysis, which determines resonant frequencies of structures and objects.

Compromise Filters

Although linear-phase filters preserve critical information, many applications also require rapid transition-band roll-off. A balance between these mutually exclusive requirements can often be achieved by phase-derived types and amplitude-compensated versions of phase filters. Applications for this approach include determining the direction of an object or signal source by analyzing the waveform from one or more receivers.

1784 Chessie Lane, Ottawa, IL 61350 - Tel: 800/252-7074, 815/434-7800 - FAX: 815/434-8176
e-mail: sales@freqdev.com • Web Address: http://www.freqdev.com

SELECTING A FILTER TECHNOLOGY

In addition to specifying transfer functions, designers who need signal filtering must choose among passive, linear-active, switched-capacitor, and digital-signal-processing (DSP) filter technologies.

Passive Filters

Passive filters contain resistors, inductors and capacitors that provide polynomial approximations of ideal filters. They often come packaged in metal cans to reduce inductor magnetic pickup. Corner frequencies generally range from hundreds of Hertz to many mega-Hertz. Passive filters require no power (and therefore no power supply) and generate no DC offset.

Low-frequency passive filters are large and heavy, and manufacturing them is expensive. Input signals also undergo “insertion loss” (attenuation) in the pass-band. The non-linearity of the magnetic materials in the inductors makes building low-distortion filters of this type difficult. An engineer who wants to design a custom filter may have trouble obtaining precision inductive components and tuning the filter to a specific corner frequency requires considerable expertise. Passive filter circuits are not easily programmable.

Linear Active Filters

Linear active filters contain resistors, capacitors, and linear operational amplifiers. Corner frequencies range from 0.001 Hz to 30 MHz. Unlike passive filters, linear-active filters require external power. Since target systems also require power, this does not generally present many impediments to designs, however, corner frequencies above 100 kHz call for wide-band amplifiers that demand significant currents.

Some semiconductor manufacturers have created monolithic-silicon linear-active filter designs. This approach diffuses or layers internal capacitors and resistors onto the same silicon substrate as the semiconductor amplifiers. Attainable capacitor values and stability of the diffused capacitors and resistors limit this technique’s applicability to higher frequencies, especially for high-order filter functions.

Switched Capacitor Filters

In switched-capacitor filters, a switched capacitor simulates a resistor at an amplifier input, thereby creating an integrator as shown in **Figure 18.**

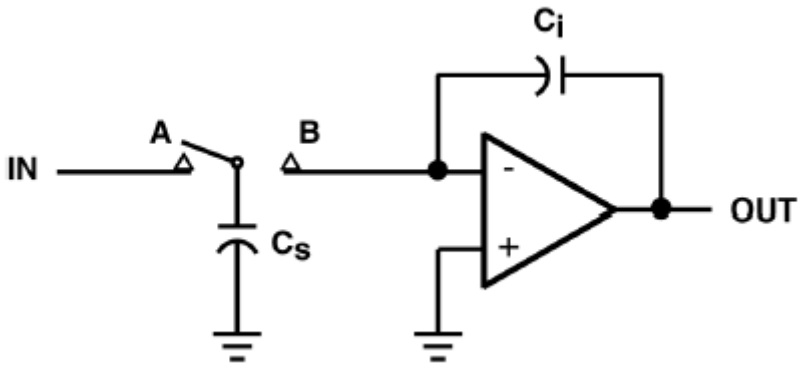

Figure 18

1784 Chessie Lane, Ottawa, IL 61350 - Tel: 800/252-7074, 815/434-7800 - FAX: 815/434-8176
e-mail: sales@freqdev.com • Web Address: http://www.freqdev.com

The circuit momentarily connects to “A”, charging capacitor “C_s” to the input voltage that is present at that moment. It then switches to “B”, dumping the charge onto the amplifier’s negative input. The amplifier then transfers the charge to the integrating capacitor “C_i”, where it remains until the next cycle either adds or subtracts charge. The higher the switch frequency, the more often “C_i” receives charge, which changes the integrator’s time constant and therefore the resulting filter’s corner frequency. Varying clock frequency permits programming filters “on-the-fly”.

Cascading sections permits constructing multi-pole filters. In some universal designs, a filter-section’s corner frequency is not an exact sub-multiple of the clock. Cascaded multi-pole versions of such designs require care to ensure that pole frequencies are correct. By switching the capacitor at 50 to 100 times the corner frequency, these filters can attain a good approximation of theoretical performance.

Since a switched-capacitor filter is a sampling device, it experiences aliasing errors, frequency components near the sampling frequency that must be eliminated to ensure accuracy. Also, this technology produces clock feed-through. **Clock feed-through** is an extraneous signal that switched-technology filters create. Although feed-through resides at 50 to 100 times the filter’s corner frequency, its amplitude can exceed the resolution or noise floor requirements of the application and can cause additional aliasing problems. Manufacturers often do not include this factor in their noise specifications, yet users must make accommodations for clock feed-through in their system design. Fortunately, its high frequency makes removal fairly easy with simple second or third-order linear-active filters.

Switched-capacitor designs are available as complete filters or as universal building blocks, requiring external resistors to function. Driving clocks may be internal or external to the filter itself. These filters can be small (DIPs and SOICs) and inexpensive because they are manufactured as silicon chips.

Digital Signal Processing (DSP) Filters

Due to the unique design considerations and requirements associated with digital filters, along with the ever-changing data conversion (A/D, DSP, FPGA…) technology, a separate section of Frequency Devices Filter Design Guide has been designated for Digital Filters.

1784 Chessie Lane, Ottawa, IL 61350 - Tel: 800/252-7074, 815/434-7800 - FAX: 815/434-8176
e-mail: sales@freqdev.com • Web Address: http://www.freqdev.com

Based on combining ever increasing computer processing speed with higher sample rate processors, Digital Signal Processors (DSP's) continue to receive a great deal of attention in technical literature and new product design. The following section on digital filter design reflects the importance of understanding and utilizing this technology to provide precision stand alone digital or integrated analog/digital product solutions.

By utilizing DSP's capable of sequencing and reproducing hundreds to thousands of discrete elements, design models can simulate large hardware structures at relatively low cost. DSP techniques can perform functions such as **Fast-Fourier Transforms** (FFT), delay equalization, programmable gain, modulation, encoding/decoding, and filtering.

Programs can be written where:

- Filter weighting functions (coefficients) can be calculated on the fly, reducing memory requirements or
- Algorithms can be dynamically modified as a function of signal input.

DSP represents a subset of signal-processing activities that utilize A/D converters to turn analog signals into streams of digital data. A stand-alone digital filter requires an A/D converter (with associated anti-alias filter), a DSP chip and a PROM or software driver. An extensive sequence of multiplication's and additions can then be performed on the digital data. In some applications, the designer may also want to place a D/A converter, accompanied by a reconstruction filter, on the output of the DSP to create an analog equivalent signal. **Figure 19** shows a typical digital filter configuration.

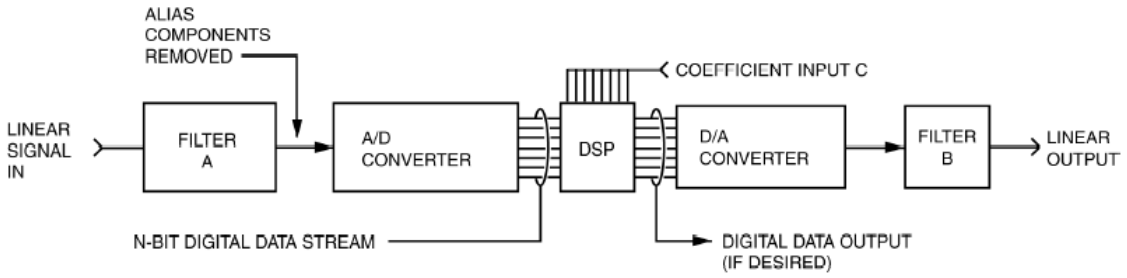

Figure 19

Digital filters process digitized or sampled signals. A digital filter computes a quantized time-domain representation of the convolution of the sampled input time function and a representation of the weighting function of the filter. They are realized by an extended sequence of multiplications and additions carried out at a uniformly spaced sample interval. Simply said, the digitized input signal is mathematically influenced by the DSP program. These signals are passed through structures that shift the clocked data into summers (adders), delay blocks and multipliers. These structures change the mathematical values in a predetermined way; the resulting data represents the filtered or transformed signal.

1784 Chessie Lane, Ottawa, IL 61350 - Tel: 800/252-7074, 815/434-7800 - FAX: 815/434-8176
e-mail: sales@freqdev.com • Web Address: http://www.freqdev.com

It is important to note that distortion and noise can be introduced into digital filters simply by the conversion of analog signals into digital data, also by the digital filtering process itself and lastly by conversion of processed data back into analog. When fixed-point processing is used, additional noise and distortion may be added during the filtering process because the filter consists of large numbers of multiplications and additions, which produce errors, creating truncation noise. Increasing the bit resolution beyond 16-bits will reduce this filter noise. For most applications, as long as the A/D and D/A converters have high enough bit resolution, distortions introduced by the conversions are less of a problem[1].

1. Theoretically, note that the ratio of the RMS value of a full-scale sine wave, to the RMS value of the quantization noise (expressed in dB) is SNR=6.02N + 1.76dB, where N is the number of bits in the ideal A/D converter.

Although DSP's rarely serve exclusively as anti-alias filters (in fact, they require anti-alias filters), they can offer features that have no practical counterpart in the analog world. Some examples are 1) a linear phase filter that provides steep roll-off (near brick wall) characteristics or 2) a programmable digital filter that allows the signal conditioning to be changed on the fly via software, (frequency response or filter shape can be altered by loading stored or calculated coefficients into a DSP program).

Instead of using a commercial DSP with software algorithms, a digital hardware filter can also be constructed from logic elements such as registers and gates, or an integrated hardware block such as an FPGA (Field Programmable Gate Array). Digital hardware filters are desirable for high bandwidth applications; the trade-offs are limited design flexibility and higher cost.

Two Types of DSP's, Two Types of Math

(1) Fixed-Point DSP and FIR (Finite Impulse Response) Implementations

Fixed-Point DSP processors account for a majority of the DSP applications because of their smaller size and lower cost. The Fixed-Point math requires programmers to pay significant attention to the number of coefficients utilized in each algorithm when multiplying and accumulating digital data to prevent distortion caused by register overflow and a decrease of the signal-to-noise ratio caused by truncation noise. The structure of these algorithms uses a repetitive delay-and-add format that can be represented as "DIRECT FORM-I STRUCTURE", **Figure 20**.

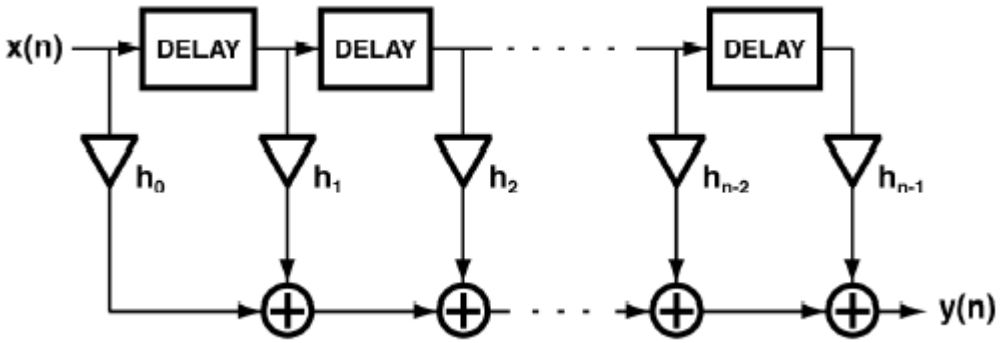

Figure 20

1784 Chessie Lane, Ottawa, IL 61350 - Tel: 800/252-7074, 815/434-7800 - FAX: 815/434-8176
e-mail: sales@freqdev.com • Web Address: http://www.freqdev.com

FIR (Finite Impulse Response) filters are implemented using a finite number "n" delay taps on a delay line and "n" computation coefficients to compute the algorithm (filter) function. The above structure is **non-recursive**, a repetitive delay-and-add format, and is most often used to produce FIR filters. This structure depends upon each sample of new and present value data.

FIR filters can create transfer functions that have no equivalent in linear circuit technology. They can offer shape factor accuracy and stability equivalent to very high-order linear active filters that cannot be achieved in the analog domain. Unlike IIR (Infinite Impulse Response) filters (See Item 2 below), FIR filters are formed with only the equivalent of zeros in the linear domain. This means that the taps depress or push down the amplitude of the transfer function. The amount of depression for each tap depends upon the value of the multiplier coefficient. Hence, the total number of taps determines the "steepness'" of the slope. This can be inferred from the structure shown in **Figure 20** above.

The number of taps (delays) and values of the computation coefficients (h_0, h_1,..h_n..) are selected to "weight" the data being shifted down the delay line to create the desired amplitude response of the filter. In this configuration there are no feedback paths to cause instability. The calculation coefficients are not constrained to particular values and can be used to implement filter functions that do not have a linear system equivalent. **Note:** more taps increase the steepness of the filter roll-off while increasing calculation time (delay) and for high order filters, limiting bandwidth.

The filter delay is easily calculated for the above structure. Delay = (½ x Taps)/Sampling rate. For example, a 300-tap filter with a sampling rate of 48 kHz yields a minimum 3.125 milli-second delay [(0.5 x 300)/48 = 3.125 milli-seconds].

Designers must also be aware of the tradeoffs between phase delay and filter precision when designing FIR filters. The bad news is that high order FIR filters have longer delay; the good news is that the phase response remains linear as a function of frequency. In applications where linear phase is critical and long phase delay cannot be tolerated, a linear active Bessel or a constant delay filter may be a better selection.

Two very different design techniques are commonly used to develop digital FIR filters:

The Window Technique and
The Equiripple Technique.

A. **Window's:** The simplest technique is known as "Windowed" filters. This technique is based on designing a filter using well-known frequency domain transition functions called "windows". The use of windows often involves a choice of the lesser of two evils. Some windows, such as the Rectangular, yield fast roll-off in the frequency domain, but have limited attenuation in the stop-band along with poor group delay characteristics. Other windows like the Blackman, have better stop-band attenuation and group delay, but have a wide transition-band (the band-width between the corner frequency and the frequency attenuation floor). Windowed filters are easy to use, are scalable (give the same results no matter what the corner frequency is) and can be computed on-the-fly by the DSP. This latter point means that a tunable filter can be designed with the only limitation on corner frequency resolution being the number of bits in the tuning word.

1784 Chessie Lane, Ottawa, IL 61350 - Tel: 800/252-7074, 815/434-7800 - FAX: 815/434-8176
e-mail: sales@freqdev.com • Web Address: http://www.freqdev.com

B. Equiripple: An Equiripple or Remez Exchange (Parks-McClellan) design technique provides an alternative to windowing by allowing the designer to achieve the desired frequency response with the fewest number of coefficients. This is achieved by an iterative process of comparing a selected coefficient set to the actual frequency response specified until the solution is obtained that requires the fewest number of coefficients. Though the efficiency of this technique is obviously very desirable, there are some concerns.

- For equiripple algorithms some values may converge to a false result or not converge at all. Therefore, all coefficient sets must be pre-tested off-line for every corner frequency value.
- Application specific solutions (programs) that require signal tracking or dynamically changing performance parameters are typically better suited for windowing since convergence is not a concern with windowing.
- Equiripple designs are based on optimization theory and require an enormous amount of computation effort. With the availability of today's desktop computers, the computational intensity requirement is not a problem, but combined with the possibility of convergence failure; equiripple filters typically cannot be designed on-the-fly within the DSP.

Many people will use windowing such as a "Kaiser" window to produce good scalable FIR filters fairly quickly without the worry of non-convergence. However, if one is interested in producing the highest performance digital filter for a given hardware configuration, the iterative Remez Exchange algorithm is worth the test.

Figure 21 illustrates a major advantage that a digital low-pass equiripple FIR filter can offer designers when solving signal-conditioning problems. F_{C1} and F_{S1} are the corner and stop-band frequencies respectively. The typical number of filter taps used for this -100 dB attenuation example is around 300. The ratio of F_{S1} to F_{C1} is 1.1, an unheard-of shape factor in the analog world. A slope calculation yields the fact that an analog filter would have to be a 30th order filter to achieve this performance! Analog filters beyond 10 poles are very difficult to realize and tend to be noisy.

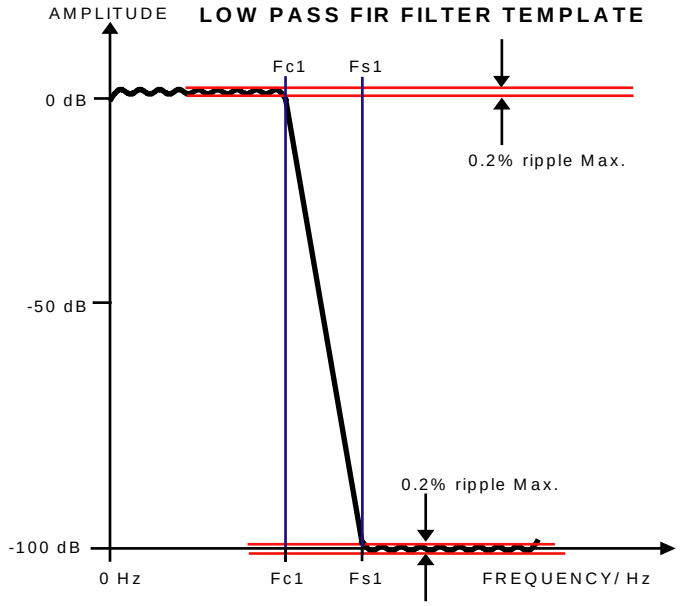

Figure 21

1784 Chessie Lane, Ottawa, IL 61350 - Tel: 800/252-7074, 815/434-7800 - FAX: 815/434-8176
e-mail: sales@freqdev.com • Web Address: http://www.freqdev.com

(2) The Floating-Point DSP and IIR (Infinite Impulse Response) Implementations
Like its name, Floating Point DSP's can perform floating-point math, which greatly decreases truncation noise problems and allows more complicated filter structures such as the inclusion of both poles and zeros. This permits the approximation of many waveforms or transfer functions that can be expressed as an **infinite recursive** series. These implementations are referred to as Infinite Impulse Response (IIR) filters. The functions are infinite recursive because they use previously calculated values in future calculations akin to feedback in hardware systems.

The equivalent of classical linear-system transfer functions can be implemented by using IIR implementation techniques. A common procedure is to start with the classic analog filter transfer function, such as a Butterworth, and apply the required transform to convert the filter equations from the complex S-domain to the complex Z-domain. The resulting coefficients yield a Z-domain transfer function in a feedback configuration with a number "n" of delay nodes that is equal to the order of the S-domain transfer function. These implementations are referred to as IIR filters because when a short impulse is put through the filter, the output value does not converge quickly to zero, but theoretically continues decreasing over an infinite number of samples. Floating Point DSPs can produce near equivalent analog filter transforms such as Butterworth, Chebycheff and elliptic because they use essentially the same mathematical structure as their analog counterparts. For the same reason, they exhibit the same or worse non-linear phase characteristics as their analog counterparts since the equivalent of poles and zeros in linear systems are reproduced with an IIR, digital filter.

Figure 22 illustrates a bi-quad digital filter structure that computes the response of a second order IIR transfer function. It has two delay nodes and the computation coefficients are A1k, A2k, B1k and B2k.

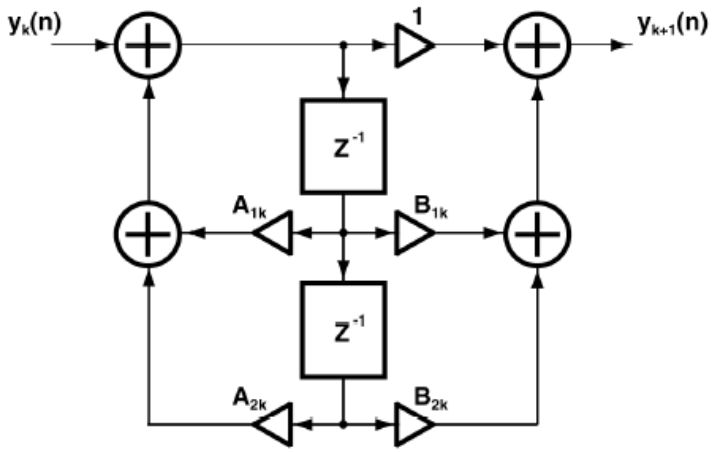

Figure 22

Floating Point processors do have some advantages over Fixed Point processors.

- Specific DSP applications such as IIR filters are easier to implement with floating point processors.
- Floating Point application code can have lower development costs and shorter time to market with respect to corresponding programs in a Fixed-Point format.
- Floating Point representation of data has a smaller amount of probable error and noise.

After all is said, these powerful Floating-Point devices can emulate Fixed-Point processors but at higher hardware cost.

1784 Chessie Lane, Ottawa, IL 61350 - Tel: 800/252-7074, 815/434-7800 - FAX: 815/434-8176
e-mail: sales@freqdev.com • Web Address: http://www.freqdev.com

Summary

Complex digital filter functions involve millions of mathematical operations. The speed of these operations depends on a variety of factors; DSP chip speed, filter complexity (number of taps), and the number of bits of accuracy in each computation. Today, many DSP turnkey and application specific platforms are available along with development systems for the savvy engineer, who wishes to do his or her own design. Many computer programs also exist that can determine the number of taps and the values of computation coefficients that are required to implement a specific digital filter performance function. In some cases these programs output files directly to a PROM burner or Flash Memory, automatically loading programs (algorithms) into the actual DSP circuit. One such Software Program is MatLab™ by (The MathWorks™) which calculates coefficients for designated FIR filters and can also produce IIR filter programs.

Because of the many hardware and software design options and trade-offs available in providing signal processing solutions, having the availability of analog and DSP design and programming expertise along with application specific Intellectual Property (IP) from one source can provide a strong argument to the busy design engineer to seek a turnkey or custom solution from a manufacturer like Frequency Devices.

Examples include:

- Multi-Rate FIR filters, which can significantly extend low frequency bandwidth limits and shorten filter delay; both are design limitations of single rate sampled DSP filter algorithms.
- Ultra low noise and distortion anti-alias and reconstruction digital filters to 120 dB.
- Low distortion signal generators to 20-bits.
- AD and DA signal converters with -100 dB or better noise floors.

As DSP sample rates continue to increase, the bandwidth and performance of DSP solutions will also increase.

1784 Chessie Lane, Ottawa, IL 61350 - Tel: 800/252-7074, 815/434-7800 - FAX: 815/434-8176
e-mail: sales@freqdev.com • Web Address: http://www.freqdev.com

Digital to Analog Conversion (D/A)

As with input signals to A/D converters, waveforms created by D/A converters also exhibit errors. For each input digital data point, the D/A holds the corresponding value until the next sample period. Therefore, the output waveform exists as a sequence of steps. This output, a kind of "sample-and-hold" – is known as a "first-order hold."

Any step-function approximation of a smooth analog wave such as D/A output consists of a set of primary-frequency sinusoidals and their harmonics. To accurately recover the analog signal requires removing these harmonics, usually with a filter following the D/A. Such a filter features a very flat amplitude response in the pass-band and a rapid roll-off above f_c. The stop-band floor must be deep enough to attenuate high-frequency component errors to below an LSB of the target system's A/D or D/A converter.

Roll-off need not be as sharp as an anti-alias prefilter, which must push the target system's useful bandwidth as close as possible to the Nyquist frequency. Even if the original signal bandwidth is 100% of Nyquist (an unrealizable goal without serious alias errors), the lowest undesirable frequency in the D/A output is the second harmonic. For reasons of convenience, many designers specify the same filter for both anti-alias and reconstruction. From an attenuation standpoint, however, this approach represents overkill. In addition, because the step-function D/A output includes fast rise and fall times, a softer roll-off, more linear phase filter (Bessel) would work better at this end of the process because it produces less ringing and overshoot than an elliptic or similar sharp-roll-off transfer function does.

According to Fourier-transform mathematics, a waveform reconstructed using a first-order hold exhibits an **amplitude error (E)** that varies as a function of frequency f and the sampling frequency f_s, and whose magnitude is given by **Figure 23.**

$$\mathbf{E} = \frac{\text{Sin}X}{X} \qquad \textbf{where: } X = \frac{\pi f}{f_s}$$

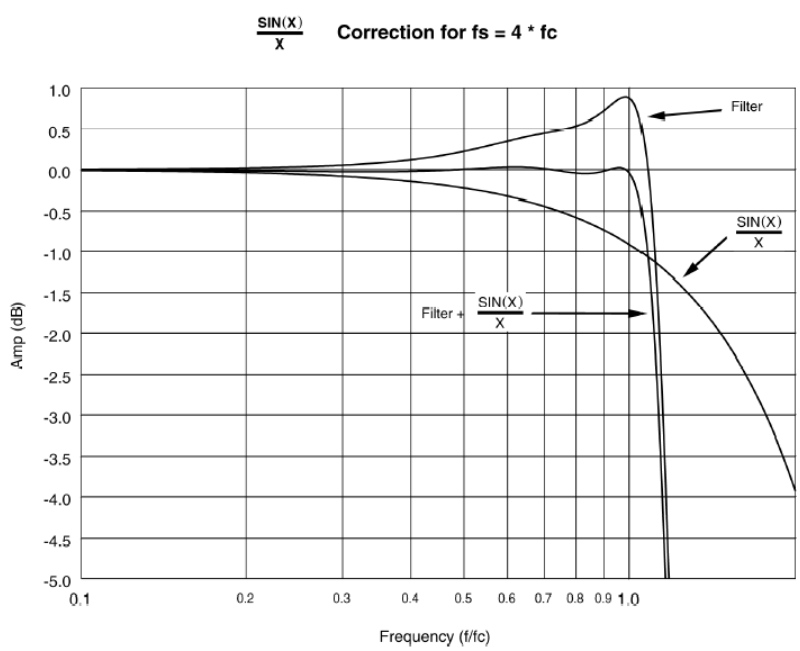

Figure 23

1784 Chessie Lane, Ottawa, IL 61350 - Tel: 800/252-7074, 815/434-7800 - FAX: 815/434-8176
e-mail: sales@freqdev.com • Web Address: http://www.freqdev.com

Choosing a filter technology is less straightforward than selecting a transfer function from among Butterworth, Bessel, and Cauer-elliptic. The best solution depends heavily on the application. To reduce alias errors to acceptable levels, designers base their filter implementation selections on the desired bandwidth and accuracy of the target system. These parameters, along with hardware costs, determine the system's speed (sampling rate), resolution (number of bits), type of A/D converter (sigma-delta, successive-approximation, flash, etc.), and anti-alias/reconstruction filter technology.

Linear-Active Filters serve applications that require system bandwidths as close as possible to the sampling frequency, with a sharp cutoff. Simple two or three-pole versions also serve as anti-alias filters and clock feed-through or reconstruction filters for systems employing switched-capacitor or DSP solutions. With active filter technology, very accurate, low frequency filters in the 2.0 MHz to sub hertz range can be built that are almost impossible to achieve with other technologies.

Switched-Capacitor designs work best where cost and space are at a premium. Other criteria to consider include: when required system accuracy is around 10 to 13 bits, the bandwidth is more than 10 kHz, and where the DC accuracy and stability specifications of switch capacitor filters are acceptable.

Applications in the multi-megahertz range or requiring power line conditioning (filtering) typically utilize **Passive Filters**. This includes snubbers for high-energy inductive or transient suppression. Also, passive filters must be used when power is not available, though the user must be willing to tolerate insertion loss (signal attenuation).

Digital Filters are used primarily when transfer-function requirements have no counterpart in the analog world, or when a DSP already resides on the circuit board to perform other functions.

An example of a digital filter selection limitation is shown in **Figure 24**. The pass-band for a high-pass digital filter is limited to the maximum bandwidth, sampling rate, and word length that the filter order allows. After that, there is no pass-band! For this example, broadband high frequency active or passive filters are an obvious alternative.

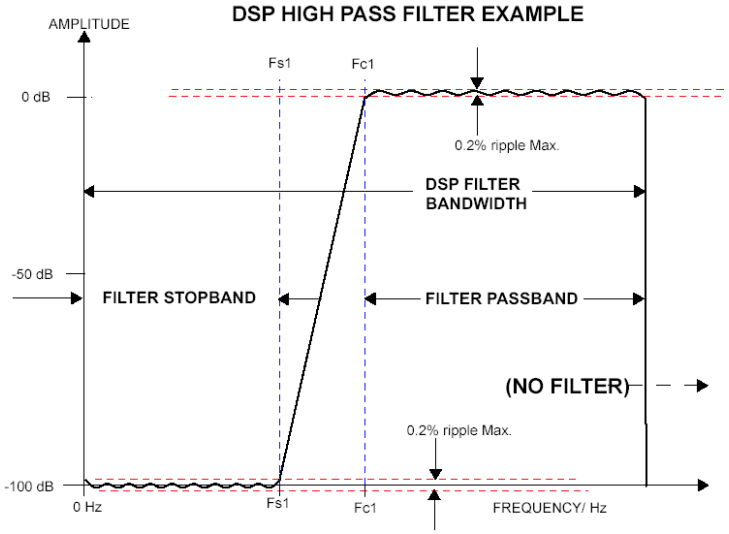

Figure 24

1784 Chessie Lane, Ottawa, IL 61350 - Tel: 800/252-7074, 815/434-7800 - FAX: 815/434-8176
e-mail: sales@freqdev.com • Web Address: http://www.freqdev.com

Digital filter selection is the choice or trade-off between Floating Point DSP - IIR filters and Fixed Point DSP - FIR filters which are illustrated in the Digital Filter Decision Tree, **Figure 25**.

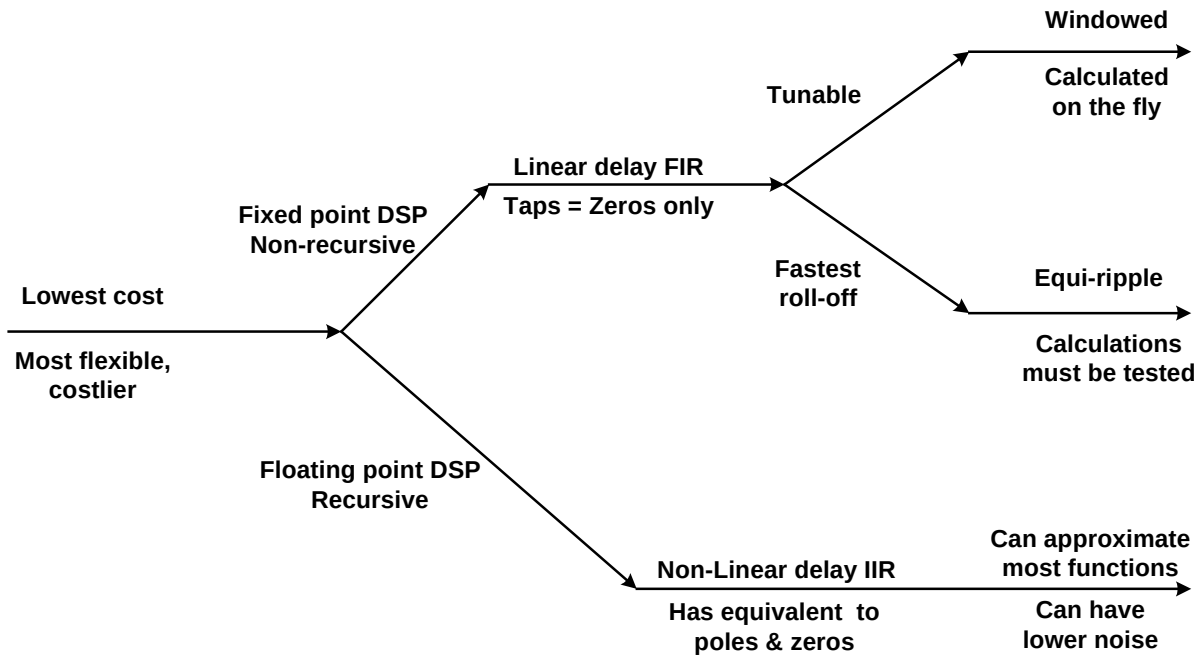

Figure 25

Whether you decide on a fixed point FIR or floating point IIR solution, the world is still analog. In many applications the conversion from analog to digital and back to analog is a requirement, often with limitations in bandwidth and design flexibility. One example is range limitation which is the maximum bandwidth imposed by the sampling when altering the digital filter frequency. A solution is to adjust the clock, which forces adjustments in the anti-alias and reconstruction filter, therefore requiring multiple fixed frequency or programmable filters (typically not cost effective). Another approach is to adjust the clock within the DSP by decimation or interpolation; hence the filter shape can be modified within the filter algorithm. This is called Multi-Rate filtering and several decimations can be implemented in series to reach very low frequencies. This Intellectual Property has been well refined by Frequency Devices engineers.

SHOULD YOU BUILD IT YOURSELF?

Electronic designers often try to ensure a product's signal integrity by constructing their own signal processing circuitry. Unfortunately, the time and money associated with engineering design and assembly efforts can make the actual cost of such a solution very high. The design may require a complex arrangement of sensitive components that consume precious board real estate and compromise system reliability. In addition, some of these components can generate their own alias signals.

Design engineers generally understand their own applications very well. Typically, however, they are not signal-conditioning or signal-processing experts. Limited experience with integrated analog and DSP technology often make creating an effective and accurate filter solution difficult and time-consuming.

1784 Chessie Lane, Ottawa, IL 61350 - Tel: 800/252-7074, 815/434-7800 - FAX: 815/434-8176
e-mail: sales@freqdev.com • Web Address: http://www.freqdev.com

On the other hand, system manufacturers are generally very sensitive to the cost of purchased solutions. The experts at Frequency Devices have seen many instances where companies have regarded self-contained signal conditioning modules and subassemblies as too expensive. Therefore, engineers design or buy simple, inexpensive alternatives for their products, hoping that lower cost and typically lower performing products will be good enough. Such approaches may work, but in many cases the reduced signal integrity degrades system performance to the point of unacceptability.

Unfortunately, once in-house designs do not meet desired performance specifications, altering the design to incorporate the proper alternative solution or accepting the degraded signals, usually under extreme time pressures, generally costs far more than relying on better solutions in the first place would have. Reinventing the wheel rarely produces the most effective results.

LET US HELP

Based on many years of experience with special-purpose signal-conditioning devices and systems, Frequency Devices offers some of the most advanced signal-processing products in the industry. We will work with you to develop specifications that are appropriate to your unique needs, avoiding either under-specifying or over-specifying in the interest of controlling cost while maximizing performance.

Whether prototyping to prove a design, looking for laboratory test equipment or working with high-volume applications for electronic original equipment manufacturers and process control, you can rely on Frequency Devices' data-acquisition, processing, and manipulation solutions for the test and measurement, aerospace, undersea, navigation, automatic test equipment, R & D, telecommunications, acoustic, and vibration markets.

Frequency Devices offers a combination of turnkey, standard and custom module and subassembly solutions utilizing both analog and digital signal processing; providing engineers with choices and solutions consistent with their system or project requirements.

1784 Chessie Lane, Ottawa, IL 61350 - Tel: 800/252-7074, 815/434-7800 - FAX: 815/434-8176
e-mail: sales@freqdev.com • Web Address: http://www.freqdev.com

ADC: An Analog to Digital converter, a device that converts a continuous analog signal into a sampled numerical code representing the original signal.

Aliasing: The result of sampling an analog frequency signal at a rate below that required by the Nyquist theorem of 2 x F_s. Under-sampling translates high frequency components into the pass-band, producing unwanted signal components and unpredictable results.

Amplitude Filters: Designed for the best amplitude response for a given situation, ie. Zero ripple in the amplitude response pass-band.

Amplitude Response: The ratio of the output amplitude to the input amplitude versus frequency. Amplitude response is usually plotted on a log/log scale

Anti-alias Filter: The pre-filtering of an analog signal, before it is digitized or sampled, to remove or substantially attenuate the undesired aliasing components.

Arithmetic Center Frequency: $F_o=(F_{c1} + F_{c2})/2$, this formula is not correct for specifying BAND-PASS or BAND-REJECT filters, where the formula for the GEOMETRIC CENTER is used instead.

Attenuation: The reduction in signal amplitude imposed by a filter or other electronics circuit upon an input signal.

Attenuation Floor: The maximum attenuation a filter needs to provide in the STOP-BAND.

Band-Pass Filter: A filter, which passes only signal frequencies within a specified, continuous frequency band, and predictably attenuates frequencies above and below the continuous band.

Band-Reject Filter: Also known as a “notch” filter, this filter rejects signal frequencies within a specified band, while passing out-of-band signals.

Bandwidth (BW): BW = F_{c1} - F_{c2}, the range of frequencies between the lower and upper CORNER FREQUENCIES of a BAND-PASS FILTER or BAND-REJECT FILTER. Usually defined at the frequencies where the response curve passes through the -3 dB points.

Center Frequency, F_o: Defined for BAND-PASS and BAND-REJECT filters as the frequency at the GEOMETRIC MEAN of two CORNER FREQUENCIES (usually -3 dB).

Clock-Feed-Through: An extraneous signal generated by the clock in switched capacitor filters.

Corner Frequency, F_c: The transition frequency range between the PASS-BAND and STOP-BAND. For Butterworth and Bessel type filters this would be the frequency where the signal is –3.01 dB with reference to the PASS-BAND amplitude. For other transfer functions such as Cauer elliptics, the corner is defined mathematically as ripple-frequency (F_r).

DAC: A Digital to analog converter is an electronic device, which takes input information in digital form and converts it to an analog output containing the same information.

DC-Offset: A constant voltage added to an input signal. DC-offset can vary with time, temperature and/or changes in corner-frequency settings.

Decibel (dB): A handy way of expressing the ratio of one signal to another. dB is calculated by $10 * \log_{10}(P_2/P_1)$, where P_2, P_1 are power levels. Voltage ratios in dB are calculated by $20 * \log_{10}(V_2/V_1)$.

Decade: A 10:1 increase or decrease of a variable, usually frequency. A 20 dB/decade gain roll-off defines a gain change of 20 dB for each 10-fold increase or decrease in frequency. Note that 6dB/octave is equivalent to 20 dB/decade.

1784 Chessie Lane, Ottawa, IL 61350 - Tel: 800/252-7074, 815/434-7800 - FAX: 815/434-8176
e-mail: sales@freqdev.com • Web Address: http://www.freqdev.com

Delay: The time difference in the starting points of two signals, both having the same frequency and measured in seconds.

Digital Filter: Software configured filters that are used to condition digitized signals utilizing DSP's (Digital Signal Processor's) or hardware structures such as certain types of Gate Arrays. These structures can be configured to mathematically manipulate digital data to provide the equivalent of analog filters or to produce filters not realizable in the analog world.

Distortion: Non-linearity present or imposed upon a signal by the signal generator and/or the signal processing. Distortion is undesirable if high precision signal processing is required.

DSP: Digital Signal Processors are types of small programmable processors capable of directly manipulating digital data in a variety of ways to signal condition or analyze incoming data. Some applications for DSP's are Cell-phones, CD & MP-3 players, and digital filters.

Electronic Filter: Electronic devices that implement filtering techniques to separate desirable signals from undesirable signals for a given application. These devices may also include capabilities to condition the signals by amplification or other processing. Note: depending upon requirements, filters may be created using analog or digital techniques.

Equiripple Technique: A digital FIR filter design alternative to the window technique that allows designers to achieve a desired frequency response with the fewest number of coefficients.

FIR filter: A Finite Impulse Response Digital Filter, usually consisting only of Zeros (no Poles), and generally implemented by a fixed point DSP processor to produce at low cost, Equiripple digital filters.

Frequency: F =1/T, the repetition rate of a sine wave or other periodic waveform in cycles/second or Hertz (Hz).

Gain: The ratio of output signal amplitude to input signal amplitude. (V_o/V_i).

Gain in dB: The difference of output signal amplitude to input signal amplitude expressed in decibels.

Geometric Center Frequency (F_o): F_o = Square root of (F_{c1}*F_{c2}). Used to specify F_o for BAND-PASS or BAND-REJECT filters.

Group Delay: The instantaneous rate of change of phase with respect to frequency of a filter, usually shown in a phase versus frequency plot.

Harmonic: A signal whose frequency of interest is an integer multiple of the fundamental frequency, i.e. F = fundamental, 2 x F = 2nd harmonic, 3 x F = 3rd harmonic, etc…

High-Pass Filter: This filter passes all frequencies above and rejects all frequencies below a specified CORNER FREQUENCY.

IIR filter: Infinite Impulse Response Digital Filter consists of the equivalent of both poles and zeros, generally implemented with a floating point DSP processor and capable of mathematically emulating most analog filters.

Infinite Recursive: Algorithms that utilize previously calculated values in future calculations. Related to floating point DSP's and IIR digital filter design.

Low-Pass Filter: This filter passes all frequencies below and rejects all frequencies above a specified CORNER FREQUENCY.

1784 Chessie Lane, Ottawa, IL 61350 - Tel: 800/252-7074, 815/434-7800 - FAX: 815/434-8176
e-mail: sales@freqdev.com • Web Address: http://www.freqdev.com

Matched Response Filters: A collection of filters specifically designed with gain and phase matched responses for multi-channel systems where channel-to-channel differences must be minimized.

Monotonic Roll Off: Constantly increasing attenuation with frequency.

Non-Recursive: A repetitive delay-and-add format utilized in fixed-point math. The finite number of "n" delay taps on a delay line and "n" computation coefficients needed to compute a digital filter algorithm. Related to fixed-point DSP's and FIR digital filter design.

Normalized Response: The ratio between a fixed reference and a variable value, both having the same fundamental physical units. A convenient way of comparing the response of a family of filters by plotting gain versus the ratio Fc/F, allowing the user to scale the curves up or down to meet his requirements.

Noise: Unwanted signals that distort or affect the signals of interest, and one of the reasons filters are used. Noise may come from external sources (Radiated noise such as EMI) be generated by system components (Amplifiers, resistors or clocks) or just may be an undesirable part of the signal itself.

Nyquist Frequency: To accurately represent an analog signal with samples, requires that the original signal's highest frequency be less than ½ the sampling frequency or alternatively, the Nyquist theorem sampling rate must be at least twice the analog signal frequency.

Octave: A doubling or halving, usually applied to frequency. A GAIN ROLL-OFF RATE of 6dB/octave defines a change of 6 dB for each doubling or halving of frequency. Note that 20 dB/decade is equivalent to 6 dB/octave.

Order: The ORDER of a filter is the number POLES in the transfer function. The higher the ORDER, the steeper the filter's transition band slope. (No less than –6dB/octave per pole.)

Pass-Band Ripple: The specified amount (typically in dB) of permissible amplitude variation in the PASS BAND. This term is usually associated with Chebychev and Cauer elliptic filters.

Pass-Band: Range of frequencies throughout which a filter passes signals with no change.

Period: T = 1/f in seconds. The time interval, which sine waves (or other periodic waveforms) repeats.

Phase: The angular measure of the difference in that starting point of two sine waves or periodic signals. Measured in degrees or radians.

Phase Filters: These filters are designed to achieve a desired phase response, ie. Preserve linear phase with frequency throughout the filter amplitude pass-band in order to preserve a transient waveform.

Phase Response: Is the phase difference (in degrees) between the filter input and output signals. Phase will typically shift with changes in frequency. See GROUP DELAY for more information.

Poles: Values of complex frequency, which make the transfer function infinite. Factors in the denominator of the transfer function polynomial.

Q (Quality Factor): For BAND-PASS and BAND-REJECT filters $Q = F_o/BW$. Note that F_o is the GEOMETRIC CENTER.

Ripple Frequency: A variation in amplitude within the pass-band of amplitude filters.

Roll-Off Rate: The slope of the filter curve approaching -6 dB/octave/pole far away from the CORNER FREQUENCY. The ROLL-OFF RATE near the CORNER FREQUENCY depends on the ORDER and the filter TYPE.

1784 Chessie Lane, Ottawa, IL 61350 - Tel: 800/252-7074, 815/434-7800 - FAX: 815/434-8176
e-mail: sales@freqdev.com • Web Address: http://www.freqdev.com

Settling Time: Mathematically related to the filter transfer function, settling time (See Delay) represents the time required for a filter transfer function to stabilize following introduction of a signal. General guide-line, the more the filter approaches a brick-wall approximation, the longer it will take to settle.

Shape Factor: The ratio between two frequencies - the frequency at a specified attenuation on the roll-off curve to the CORNER FREQUENCY at its specified attenuation, usually 3 dB or the mathematical corner frequency depending on the filter type.

Step Response: The response of a filter to a sudden change in voltage amplitude at the filter (See Amplitude Filters) input can result in overshoot (ringing).

Stop-Band: Range of frequencies throughout which a filter attenuates signals by a defined amount.

Stop-Band Attenuation: Specifies the minimum amount of ATTENUATION a filter will exhibit at a designated frequency or range of frequencies, which lie outside the pass band.

Total Harmonic Distortion (THD): A specification used as a single number representation of the distortion present in the output of an active circuit. It is the RMS sum of the individual harmonic distortions (ie 2nd, 3rd, --- etc.) that are created by the non-linearity of the active and passive components in the circuit when it is driven by a pure sinusoidal input at a given amplitude and frequency.

Transition band: The non-ideal range of frequencies contained in the pass band usually bounded between the corner frequency Fc and the attenuation floor defined by the transfer function.

Type Filter: Butterworth, Bessel, Chebychev, Cauer elliptic, constant delay, FIR, IIR or other special response characteristic.

Window Technique: A design technique for digital FIR filters that utilizes well-known frequency domain transition functions.

Zeros: Values that make the transfer function zero. Factor in the numerator of the transfer function polynomial.

1784 Chessie Lane, Ottawa, IL 61350 - Tel: 800/252-7074, 815/434-7800 - FAX: 815/434-8176
e-mail: sales@freqdev.com • Web Address: http://www.freqdev.com